About XP95 I.S.

Introduction to intrinsic safety

There are many places where an explosive mixture of air and gas or vapour is or may be present continuously, intermittently or as a result of an accident. These are defined as hazardous areas by BS EN 60079, the code of practice for installation and maintenance of electrical apparatus in potentially explosive atmospheres.

Hazardous areas are common in petroleum and chemical engineering plants and in factories processing and storing gases, solvents, paints and other volatile substances.

Electrical equipment for use in these areas needs to be designed so that it cannot ignite an explosive mixture, not only in normal operation but also in fault conditions. There are a number of methods available to achieve this, oil-immersion, pressurised apparatus and powder filling, for example, but the two in most common use are flameproof enclosures and intrinsic safety.

Flameproof equipment is contained in a box so strong that an internal explosion will neither damage the box nor be transmitted outside the box. The surface must remain cool enough not to ignite the explosive mixture.

When flameproof equipment is interconnected, flameproof wiring must be used. This method is most valuable when high power levels are unavoidable but is not acceptable for areas in which an explosive gas/air mixture may be continuously present or present for long periods.

For this reason Apollo fire detectors are made intrinsically safe rather than flameproof. Intrinsically safe equipment operates at such low power and with such small amounts of stored energy that it is incapable of causing ignition:

- In normal conditions
- With a single fault (for Ex ib categorisation)
- With any combination of two faults (for Ex ia categorisation)

In any of these conditions every component must remain cool enough not to ignite the gases for which it is approved.

Categorisation of hazardous areas

BS EN 60079-10-1 defines a hazardous area as one in which explosive gas/air mixtures are, or may be expected to be, present in quantities such as to require special precautions for the construction and use of electrical apparatus.

The degree of risk in any area is a function of:

- The probability of an explosive mixture being present
- The type of gas which may be present
- The temperature at which a gas might ignite spontaneously

These are defined in Table 1, Zone Categorisation, Table 2, Sub-division of Group II Gases.

Table 1: Zone Categorisation

Zone	Definition	Intrinsically safe equipment approval required
0	In which an explosive gas/air mixture is continuously present or present for long periods	Ex ia
1	In which an explosive gas/air mixture is likely to occur in normal operation	Ex ia or Ex ib
2	In which an explosive gas/air mixture is not likely to occur in normal operation and if it occurs will exist only for a short time	Ex ia or Ex ib or Ex ic

Table 2: Subdivision of Group II gases

Zone	Definition	Intrinsically safe equipment approval required
Acetylene	Carbon Disulphide, Hydrogen	IIC
Ethylene	Butadiene, Formaldehyde, Diethyl-ether	IIB or IIC
Propane	Acetaldehyde, Acetone, Benzene, Butane, Ethane, Hexane, Heptane, Kerosene, Naptha, Petroleum, Styrene, Xylene	IIA or IIB or IIC

Related Apollo Product Ranges

Product	Publication Type	PP Number
XP95 I.S. Optical Smoke Detector	Datasheet	PP5114
XP95 I.S. Heat Detector	Datasheet	PP5029
XP95 I.S. Galvanic Barrier	Datasheet	PP5035
XP95 I.S. Protocol Translator	Datasheet	PP5034
XP95 Optical Smoke Detector	Datasheet	PP2610
XP95 Heat Detector	Datasheet	PP2611
XP95 Multisensor Detector	Datasheet	PP2070
MiniDisc Remote Indicator	Datasheet	PP2074
Mounting Accessories	Datasheet	PP5068

For XP95 I.S. devices manufactured before 1st June 2024, BS 38 (Optical) BS 26 (Heat) refer to PP1095.

XP95 Intrinsically Safe communications protocol

The standard XP95 communications protocol is designed to be very robust and to give the maximum flexibility to designers of loop driver circuits. The current and voltage levels used are chosen to be well above noise levels and to operate in adverse conditions with the minimum of errors. The maximum voltage and current levels used are, however, outside the limits of intrinsically safe (I.S.) systems and it has been necessary to apply lower limiting values for both current and voltage in the I.S. range.

36 Brookside Road, Havant
Hampshire, PO9 1JR, UK.
Tel: +44 (0)23 9249 2412
Fax: +44 (0)23 9249 2754
Email: enquiries@apollo-fire.com
Web: www.apollo-fire.co.uk

All information in this document is given in good faith but Apollo Fire Detectors Ltd cannot be held responsible for any omissions or errors. The company reserves the right to change the specifications of products at any time and without prior notice.

Assessed to ISO 9001:2015 Cert/LPCB ref. 010
Assessed to ISO 14001:2015 Cert/LPCB ref. 010 EMS
Cert/LPCB ref. 010
A Halma company
© Apollo Fire Detectors Ltd 2026

The voltage limitation arises because of the need for safety barriers. The barriers used with Apollo I.S. detectors are rated at 28 volts, the highest rating that is commercially available. These are used to limit the voltage inside the hazardous area to a (practical) maximum of about 26 V dc. Although this is within the standard XP95 protocol specification, it is lower than that provided by most loop drivers.

The safety barrier is also responsible for the current limitation because the 28 V barriers have a series resistance of at least 300 ohms. This resistance results in unacceptable voltage drops if the normal 20 mA current pulses are used. It has therefore been necessary to reduce the amplitude of the current pulses to 10 mA.

XP95 Protocol Translator

In order to enable the use of standard control and indicating equipment in intrinsically safe systems, Apollo has developed a device to 'translate' voltage levels from any loop driver operating within the XP95 limits to levels compatible with the I.S. requirements. The translator also 'boosts' the current pulses returned by the I.S. detectors from 10 mA to 20 mA, thereby ensuring compatibility with standard loop driver thresholds. For more information regarding the XP95 Protocol Translator refer to PP5034.

System design

The design of an intrinsically safe fire detection system should only be undertaken by engineers familiar with codes of practice for detection systems and hazardous area electrical systems. In the UK the relevant standards are BS5839-1 and BS EN 60079-14 respectively.

The fire detection performance of the XP95 I.S. range is the same as that of its standard counterparts. Performance information is given in the XP95 I.S. products data sheets.

The BASEEFA certification of the I.S. devices covers their characteristics as components of an intrinsically safe system and indicates that they can be used with a margin of safety in such systems. The precise way in which the system can be connected and configured is covered by an additional, 'system' certification. The System Diagram, Z20982, see Figure 6, details cable parameters and permissible configurations of detectors, manual call points and safety barriers which are certified by BASEEFA. Any user wishing to install a system outside the parameters given on this system diagram cannot make use of the Apollo certification and should seek independent certification from a competent certification body.

The BASEEFA system Certificate Number is BAS21Y0069 / IECEx BAS21.0014

Any system installed within the parameters specified in Z20982 should be marked in accordance with BS EN 60079-25. The marking should include at least 'Apollo XP95 I.S. Fire Detection System, BASEEFA No BAS21Y0069 / IECEx BAS21.0014

In safe area (standard) applications it will be normal practice to connect the wiring as a loop, with both ends terminated at the control panel. In the event of an open-circuit fault it is then possible to drive both ends simultaneously. In a hazardous area it is not possible to use a loop configuration because the potential to feed power from each end of the loop would double the available energy in the hazardous area and contravene the energy limitations of the I.S. certification. All XP95 I.S. circuits must therefore be connected as spurs from the safe area loop or as radial connections from the control panel.

It is recommended, for the highest system integrity, that each I.S. circuit be restricted to a single zone and that the connection from the safe area loop to the I.S. spur be protected on each side by XP95 isolators. The DIN-Rail dual isolator (55000-802) is particularly suited to this application. This configuration, shown in Figure 1 will conform fully with the requirements of BS5839-1 and with local codes since a single wiring fault will result in the loss of only one zone of detection.

Figure 1: Schematic wiring diagram of XP95 I.S. circuit to BS5839

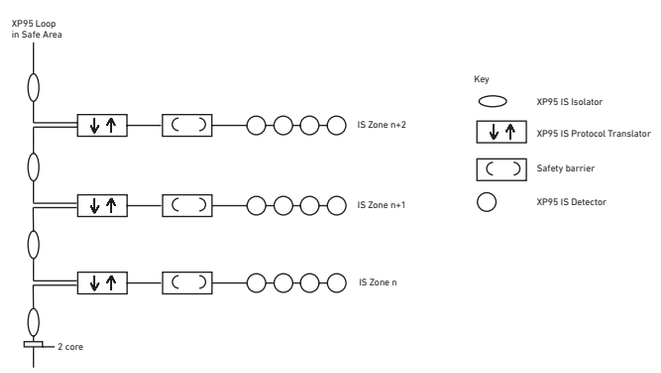

In certain circumstances it may be possible for the simpler configuration, shown in Figure 2 to be used. This arrangement may include single or dual-channel translators, housed, together with the critical wiring, in a robust mechanical housing such as the Apollo DIN-Rail enclosures part no. 29600-239 (1 x I.S. circuit) or part no. 29600-240 (up to 5 x I.S. circuits). For further advice, please contact the Technical Support Team at Apollo.

Figure 2: Schematic wiring diagram of XP95 I.S. circuit using a dual channel protocol translator

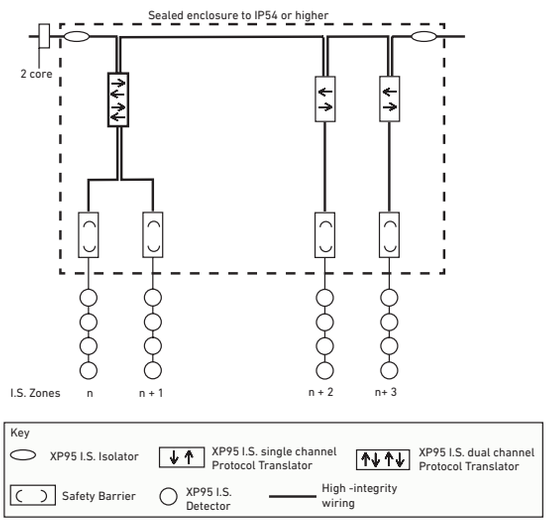

Figure 3: Detail of wiring diagram for XP95 I.S. Zone

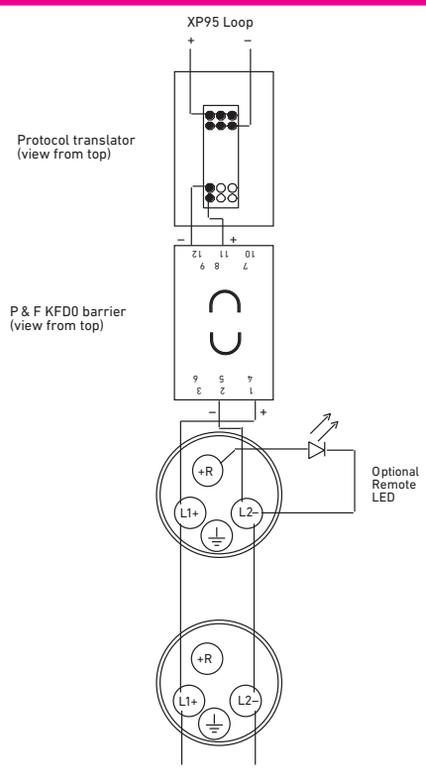

Types of safety barriers

The certified system configurations allow for two types of safety barrier, each of which has its own advantages and disadvantages. A brief outline of their characteristics is given below.

Single Channel 28 V/300 Ω Barrier

This is the most basic type of barrier and therefore the lowest in cost. Being passive devices, they also impose the minimum of restrictions on the operation of the fire detectors. Thus, single channel barriers are available either as positive or negative polarity where the polarity refers to the polarity of the applied voltage relative to earth.

The significance of this is that one side of the barrier must be connected to a high-integrity (safety) earth. Although this earth connection has no effect on the operation of the XP95 I.S. devices and is not needed for their correct operation, it may not be acceptable to the operation of the control and indicating equipment. This is particularly true if the control equipment incorporates earth-leakage monitoring and even without this feature the earthing of the loop may cause unwanted cross-talk between loops.

If the earth connection is not acceptable then the isolating barriers should be used.

Galvanically Isolated Barrier

Galvanically isolated barriers (also known as transformer isolated barriers) differ from conventional shunt zener barriers in that they provide electrical isolation between the input (safe area) and the output (hazardous area). This is achieved by the use of a dc converter on the input side which is connected to the hazardous area through a voltage-and power-limiting resistor/zener combination similar to a conventional barrier.

The galvanic isolation technique means that the circuit does not need a high integrity (safety) earth and that the intrinsically safe circuit is fully floating. Earth leakage problems for control and indicating equipment are therefore eliminated if this type of interface is used.

Note: *Although the circuit does not require a high-integrity earth, it is permissible to earth either polarity of the hazardous area circuit if required by other system considerations.*

Although galvanically isolated barriers are widely used with conventional fire detectors the pulse response of standard products has been too slow to allow their use in analogue addressable systems. Apollo has worked closely with Pepperl + Fuchs in the development of a special galvanically isolated barrier which freely transmits the XP95 protocol pulses without introducing severe voltage drops.

This interface is available as single or dual channel versions and is recommended for any application in which direct earth connections are not acceptable. The Pepperl + Fuchs type numbers are KFD0-CS-Ex1.54 (Apollo part no. 29600-098) and KFD0-CS-Ex2.54 (available from Pepperl + Fuchs) for the single and dual channel devices respectively. Both versions are BASEEFA certified under Certificate Number BAS00ATEX7087.

The galvanically isolated barrier is a two-wire device which does not need an external power supply. Current drawn from the XP95

loop by the barrier itself is less than 2mA when loaded as specified by the manufacturer. The housing is a DIN-Rail mounting, identical to that used for the protocol translator.

Approved safety barriers

The system certification includes a generic specification for barriers, two additional, individually approved barriers and two transformer isolated current repeaters (galvanic barriers).

The generic specification is:

Any shunt zener diode safety barrier certified by BASEEFA or any EU approved certification body to

E Ex ia IIC

Having the following or lower output parameters:

Uz = 28 V

I max:out = 93.3 mA

W max: out = 0.67 W

In any safety barrier used the output current must be limited by a resistor 'R' such that

$$I\ max{:}\ out = \frac{Uz}{R}$$

Wiring and cable types

It is not permitted to connect more than one circuit in the hazardous area to any one safety barrier and that circuit may not be connected to any other electrical circuit.

Both separate and twin cables may be used. A pair contained in a type 'A' or 'B' multicore cable (as defined in clause 12.2.2 of BS EN 60079-14) may also be used, provided that the peak voltage of any circuit contained within the multicore does not exceed 60 V.

The capacitance and either the inductance or the inductance to resistance (L/R) ratio of the hazardous area cables must not exceed the parameters specified in Table 4. The reason for this is that energy can be stored in a cable and it is necessary to use cable in which energy stored is insufficient to ignite an explosive atmosphere.

To calculate the total capacitance or inductance for the length of cables in the hazardous area, refer to Table 3, which gives typical per kilometre capacitance and inductance for commonly used cables. (Note: *All XP95 I.S. devices have zero equivalent capacitance and inductance*).

Safety earth

Shunt zener safety barriers must be connected to a high integrity earth by at least one and preferably two copper cables, each of cross sectional area of four mm² or greater. The connection must be such that the impedance from the connection point to the main power system earth is less than one ohm.

Intrinsically safe circuits in the hazardous area should be insulated from earth and must be capable of withstanding a 500V RMS ac test voltage for at least one minute. When using armoured or copper sheathed cables, the armour or sheath is normally isolated from the safe area busbar.

Table 3: Examples of electrical characteristics of cables commonly used in I.S. fire protection systems

Cable Type	Core	Size mm²	Conductor Resistance Ohm/km/Core	Inductance mH / km	Capacitance µF / km		Conductor Class (1= solid copper conductor)
					Core to Core	Core to Sheath	
ELAND Cables NF M 87 - 202 EGFA / EIFA / EGSF / EISF	2	0.5	37.9	-	160	230	1
ELAND Cables NF M 87 - 202 EGFA / EIFA / EGSF / EISF	2	1.5	12.5	-	85	180	1

The above cables are used as an example (See Fig 4 and 5 below), however any cable allowed by local codes in I.S. Hazardous Areas may also be used. In this case, the individual parameters need to be determined, and the necessary calculations carried out.

Table 4: Limits for energy stored in cables

Group	Capacitance µF	Inductance mH	L/R Ratio µH / Ohm
IIC	0.083	4.2	55
IIB	0.65	12.6	165
IIA	2.15	33.6	440

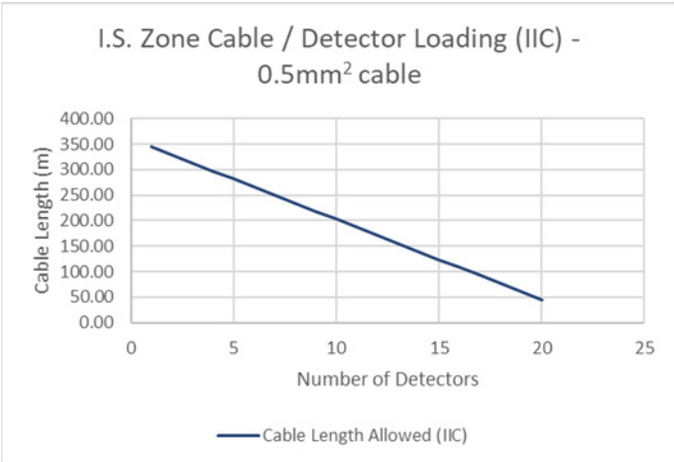

Figure 4

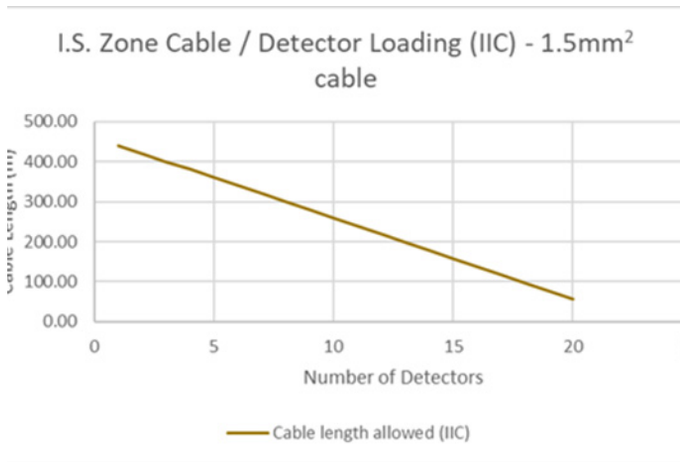

Figure 5

Note: The graphs' above indicate the number of Detectors allowed vs Cable length in a IIC environment using the cables in Table 3. IIC has a Capacitance Limit of 83nF. This includes both the Detector Ci (3.6nF max) and Cable Capacitance, hence the restriction to 12 Detectors / zone.

IIA and IIB environments have much higher Capacitance limits, such that the Maximum number of 20 Detectors may be installed.

Table 5: Cable description / Construction

Cable Suffix	Description
EGFA	Collectively Screened, Double Steel Tape, Armoured, PVC Cable
EISF	Individually and Collectively Screened, Unarmoured, PVC Cable
EIFA	Individually and Collectively Screened, Double Steel Tape, Armoured, PVC Cable
EGSF	Collectively Screened, Unarmoured, PVC Cable

Remote LED connection

A drive point is provided on each of the XP95 I.S. detectors for a remote LED indicator. For connection details see Figure 3. The indicator must be a standard high-efficiency red LED and does not require a series limiting resistor since current is limited within the detector to approximately 1 mA. The remote LED cannot, as in the standard XP95 range, be controlled independently from the integral LED since it is effectively connected in series with the integral LED. The benefit of this configuration is that illumination of the remote LED does not increase the current drawn from the loop.

The system certification allows for the use of any LED indicator having a surface area between 20 mm² and 10 cm² which covers all commonly used case styles from T1 (3 mm) upwards but would exclude some miniature and surface mounted types. Additional requirements of the certification are that the LED and its terminations must be afforded a degree of protection of at least IP20 and must be segregated from other circuits and conductors as defined in BS EN 60079-14.

The Apollo MiniDisc Remote Indicator (53832-070) is suitable using connections B(+) and C(-).

Installation

It is important that the XP95 I.S. detectors are installed in such a way that all terminals and connections are protected to at least IP20 when the detector is in the base. Special care must be taken with the rear of the mounting base where live metal parts (rivets) may be accessible. Flush mounting of the base on a flat surface will provide the required degree of protection.

If the base is mounted on a conduit box (e.g. BESA box or similar) whose diameter is less than 85 mm then the base should be fitted with a XP95 Backplate (Apollo part number 45681-233). Use of the backplate will prevent access to the metal parts and will also protect the rear of the base from water ingress. The conduit box available from Apollo, part no. 45681-204, is also acceptable for mounting I.S. bases. Apollo also supply a range of deckhead mounting boxes.

Figure 6 shows permissible methods of installing intrinsically safe detector bases.

Note: *The earth terminal in the base is provided for convenience where continuity of a cable sheath or similar is required. It is not necessary for the correct operation of the detector nor is it provided as a termination point for a safety earth.*

Figure 6: Permissible methods of mounting I.S. detector bases

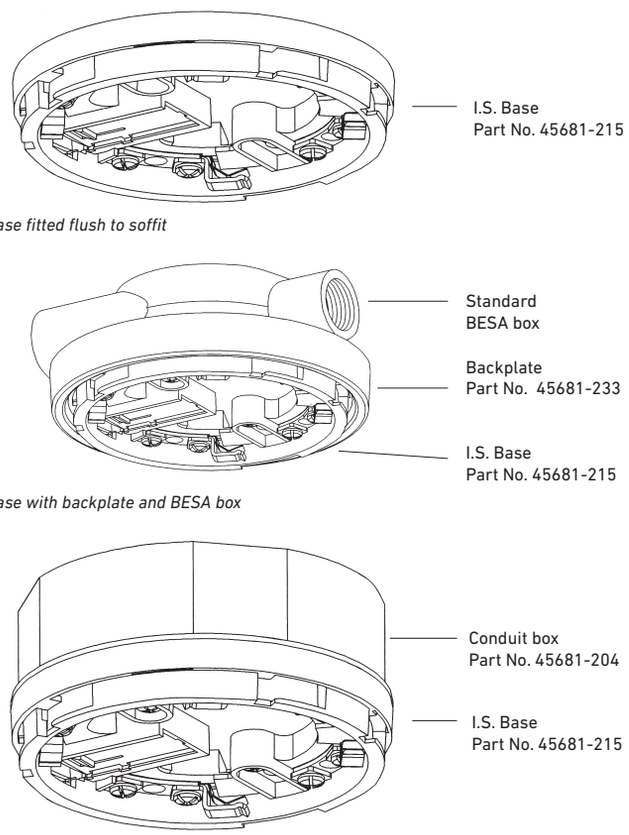

Maximum loading of an I.S. circuit

The safety barrier is a mandatory part of an I.S. system, but the high series impedance limits the number of I.S. detectors that may be fitted to the circuit. Typically an I.S. circuit will have a maximum load of about 15 detectors depending on the barrier type, the type of devices fitted and the number of detector LEDs allowed to illuminate concurrently by the Control and Indicating Equipment.

When calculating the detector load to ensure the I.S. detection zone is not overloaded two components of the current drain must be considered, namely the standing current of the devices by themselves and the maximum drain caused by alarm LEDs being illuminated.

The standing current of the devices can be calculated by taking the sum of the individual device currents on the circuit, as given in the section 'Technical data' for each product.

The maximum number of LEDs that can be illuminated simultaneously should be limited by the panel software.

Table 6 and Table 7 show the maximum device current which can be supported for varying numbers of LEDs illuminated for zener and galvanic barriers respectively.

Table 6 : Allowed Loading (No. of LED's)

	IIA / IIB (20 Detectors Max)	IIC (12 Detectors Max)
Galvanic Barrier	2	2
Zener Barrier	5	5

Table 7: Loading of the fire loop from a Translator and Barrier pair

	Characteristic	Zener Barrier	Galvanic Barrier
Min Loading	Current (mA)	1	5
	Capacitance (nF)	1	90
Max Loading	Current (mA)	10	10
	Capacitance (nF)	80	170

Using Galvanically Isolated Barriers

Whilst the cable parameters in Table 4 specify the allowable limits for energy storage in the Hazardous area wiring these values do not generally allow reliable XP95 protocol transmission. This is particularly true when using Galvanically Isolated Barriers. Due to their design, these barriers present a relatively high capacitive load on the main fire loop. Therefore, the main fire loop capacitive loading and the I.S. spur capacitive loading must be carefully considered when designing a fire system.

The maximum impedance allowed on the I.S. spur is 15 ohms and 80nF, which is typical of 500m of FP200 cable.

The maximum capacitive load that can be tolerated on the fire loop will be defined by the Control Panel manufacturer. The capacitive load of the IS zone includes 90nF for the galvanic barrier and the total cable capacitance (80nF maximum). This should be added to the main fire loop capacitance and compared with the fire panel specification.

Additionally, a galvanic barrier will add 5mA to the system load which should be added to the loop loading calculations.

The loop calculations for each I.S spur often use the maximum load of 10mA and 200nF as the equivalent load on the fire main loop. Any calculation must ensure that the translator has at least 19V at the translator input.

Servicing

Servicing of I.S. fire detectors may be carried out only by a BASEEFA authorised body. In practical terms this means that Apollo XP95 I.S. fire detectors may be serviced only by Apollo at its factory. Servicing of the fire protection system should be carried out as recommended by the code of practice BS 5839-1 or other local regulations in force. For more information on servicing Apollo detectors, please refer to the care, service and maintenance guide, PP2055.

Figure 7: Functional earthing and wiring (Sheathed and Unsheathed)

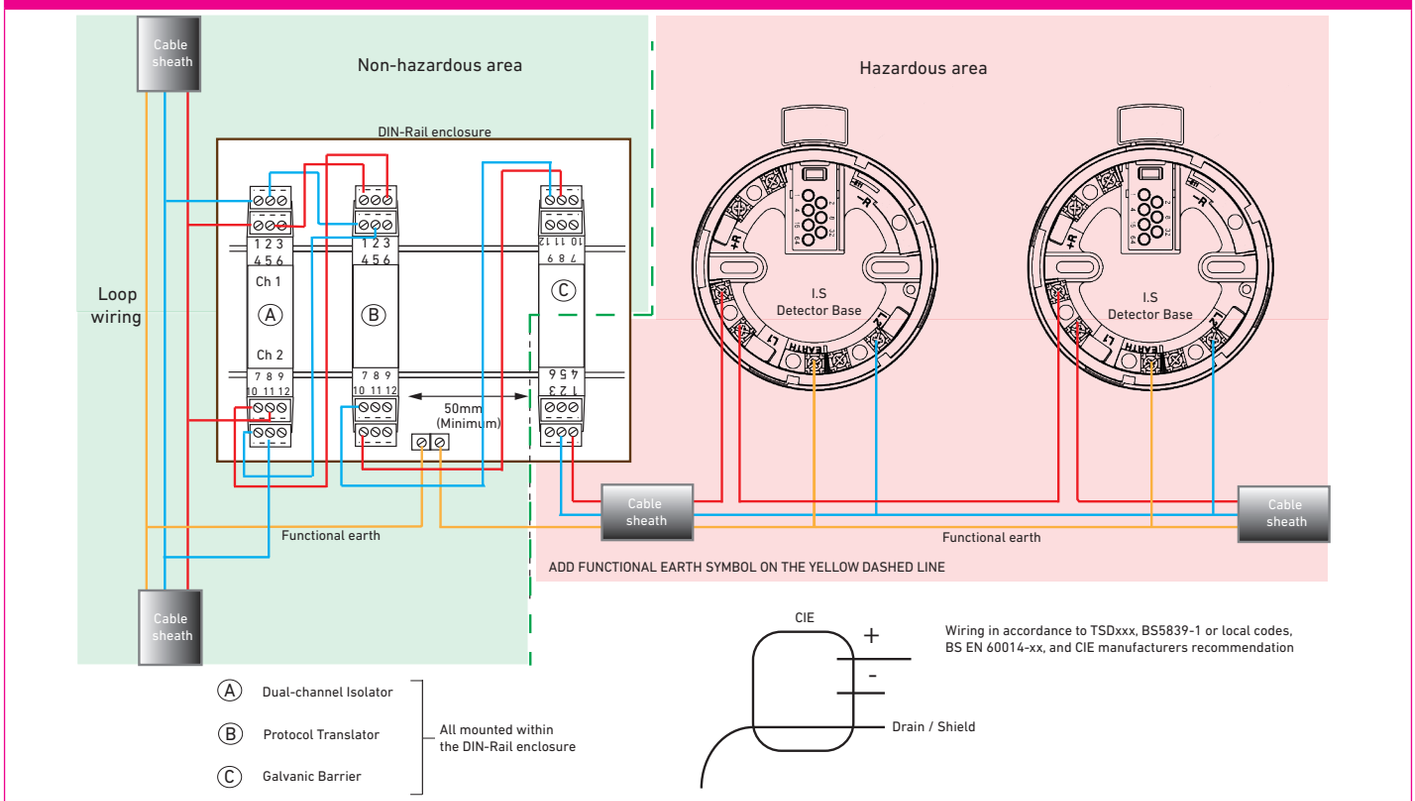

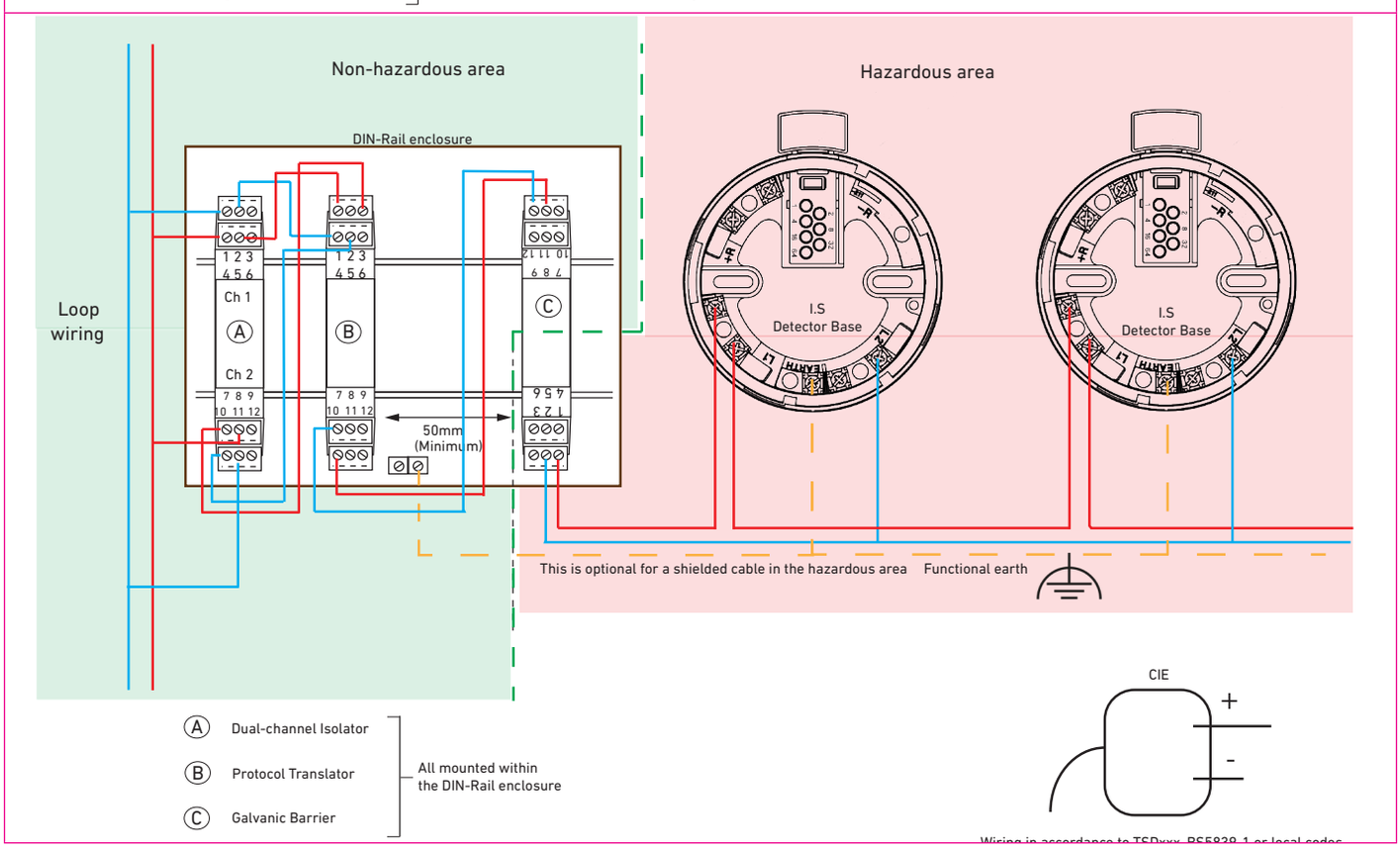

Figure 8: XP95 I.S. System drawing

The XP95 I.S. System Drawing to be added shortly.